Ripon / Pickering

Short Description

A dual purpose log cabin building with summer house area and separate storage shed area accessed via a solid timber door. Features integral roof overhang over main doors useful in poor weather. Available handed (Ripon or Pickering). Ideal for the smaller garden.

Features

- Tongue and Groove floor and roof boards
- Hand finished single glazed windows and doors, separate panes (28mm buildings)
- Hand finished Double Glazed windows and doors (44mm buildings)
- Glazing bars supplied for fitting if desired (for DG windows)
- Double door with euro cylinder lock
- Adjustable door hinges
- Available right handed (Ripon) or left handed (Pickering)

Optional Features

- Mineral roll roofing felt
- Bitumous roof shingles
- Canadian Cedar Shingles
- Extra windows
- Professional Installation
- Timber treatment (at time of installation)
- Electrical wiring to NICEIC / Part P

Key Dimensions

- External size availability 2.8x4m
- Height to Eaves 2.2m
- Height to Ridge 2.9m

Timber Thickness Availability

28mm
44mm

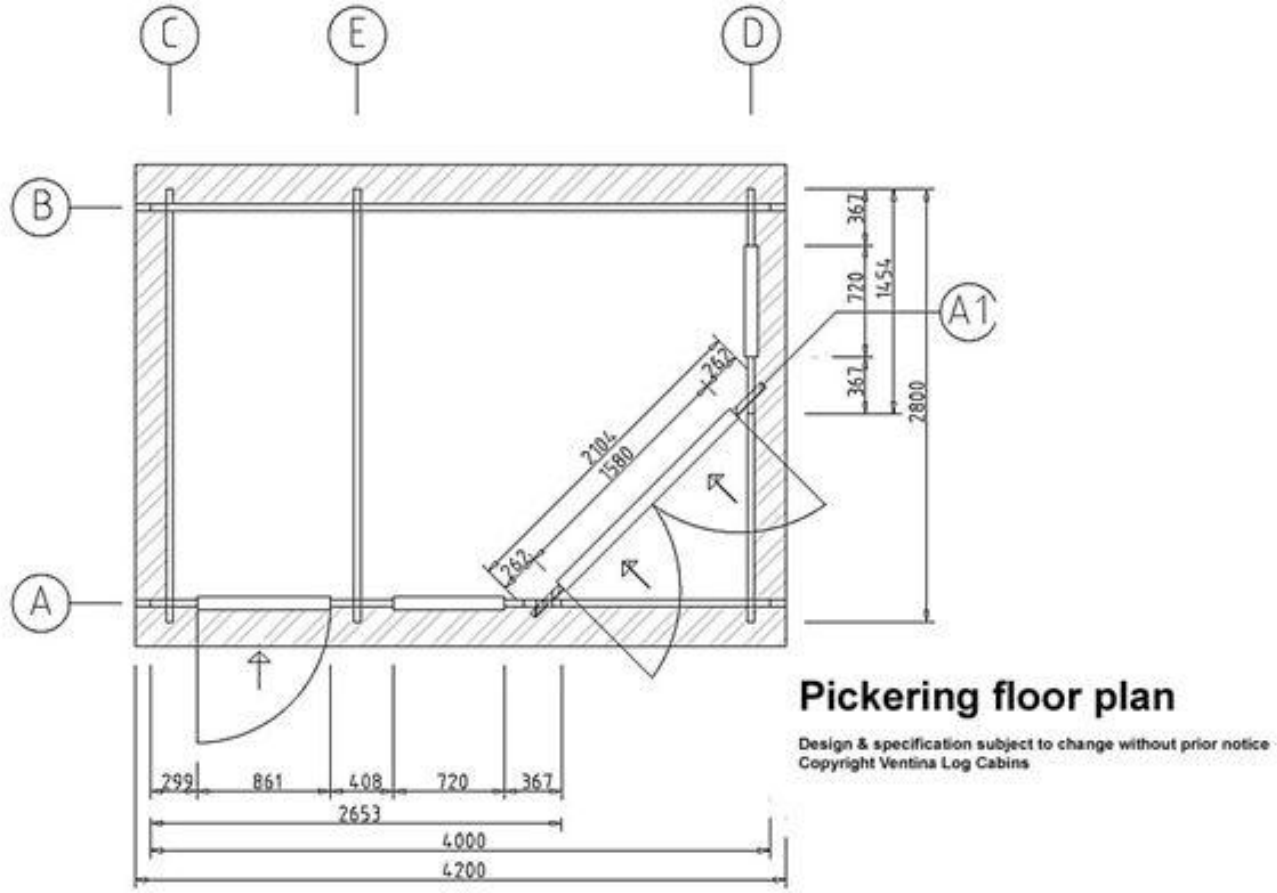

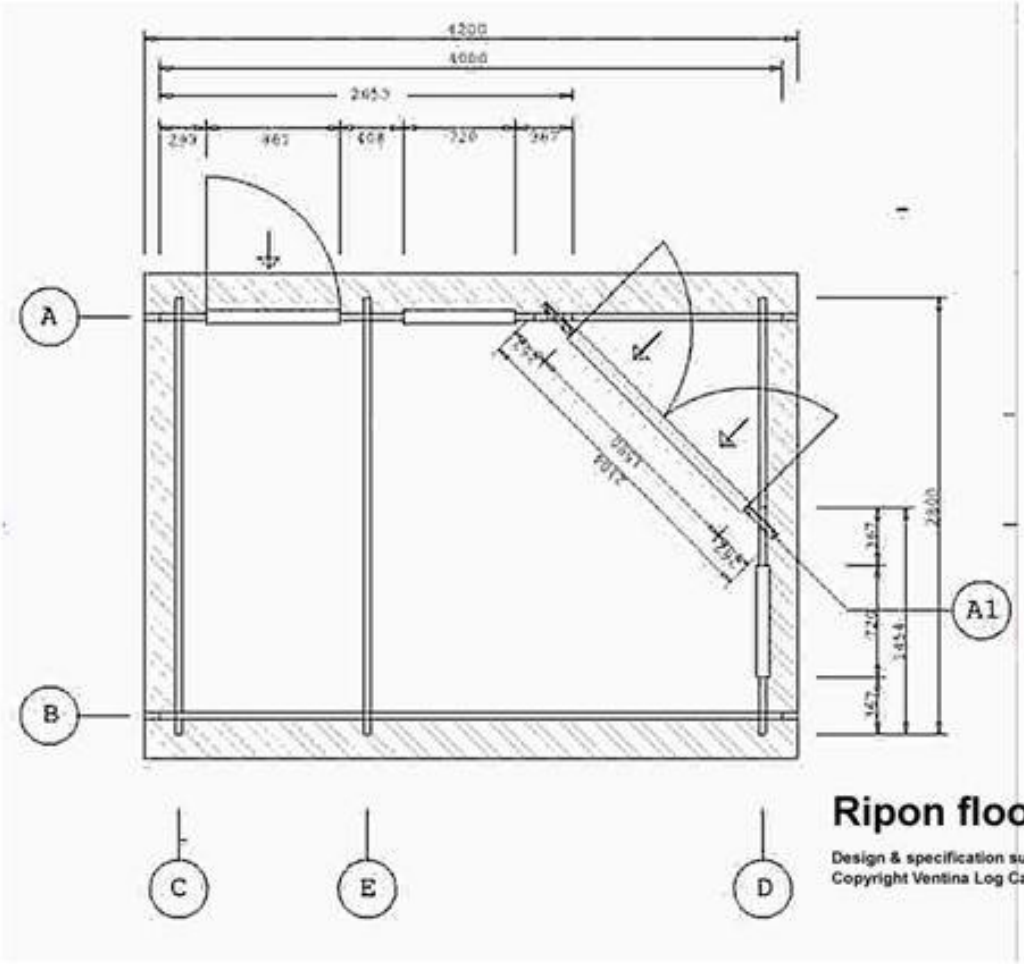

Ripon floor plan

Design & specification subject to change without prior notice
Copyright Ventina Log Cabins